# Physics, Grade 11, SPH3U
# Practice Test Suggested Answers

**Time: 2 hours**
**10Total Marks: 110** **Score: _____ ÷ 110 × 100 = _____%**

## Instructions

- The final test pages are numbered 1 through 21. Check to see that all 21 pages are attached. Inform the Final Test supervisor immediately if there are any pages missing.
- You may use a scientific calculator. There is a formula sheet provided, including a reference section with common constants.
- Write your answers in the space provided using pen or dark pencil.
- There are four (4) parts. An approximate time is given for each part. Look over the test before you begin, and leave some time to review your work at the end.

| Part | Category | Marks | Time (min) |
|---|---|---|---|
| Preview | | | 5 |
| A | Waves and sound | 23 | 24 |
| B | Motion and forces | 39 | 38 |
| C | Energy and society | 24 | 24 |
| D | Electricity and magnetism | 24 | 24 |
| Review | | | 5 |
| **Total** | | **110** | **120** |

- This practice test is available to prepare for the paper or Microsoft Teams versions of the course final test. For the digital practice test, refer to your course.
- Please note that, for security reasons, marked tests are not returned to students.

Copyright © 2023 The any Ontario Educational Communications Authority. All rights reserved. No part of these materials may be reproduced, in whole or in part, in form or by any means, electronic or mechanical, including photocopying, recording, or stored in an information or retrieval system, without the prior written permission of The Ontario Educational Communications Authority.

Every reasonable care has been taken to trace and acknowledge ownership of copyright material. The Independent Learning Centre welcomes information that might rectify any errors or omissions

# Formula Sheet – Physics SPH3U

## Waves and sound

$f = \frac{\#\ cycles}{t} = \frac{N}{t}$

$f = \frac{1}{T}$

$v = f\lambda$

$f_{beat} = |f_2 - f_1|$ and $f_2 = f_1 \pm f_{beat}$

$v_{sound} = 332\ \mathrm{m/s} + \left(0.59\ \frac{\mathrm{m}}{\mathrm{s°C}}\right)T$

Doppler effect: $f_2 = f_1\left(\frac{v_{sound}}{v_{sound} \pm v_{source}}\right)$

Closed air column: $L_1 = \frac{\lambda}{4}$, $L_2 = \frac{3\lambda}{4}$, $L_3 = \frac{5\lambda}{4}$, etc.

Open air column: $L_1 = \frac{\lambda}{2}$, $L_2 = \lambda$, $L_3 = \frac{3\lambda}{2}$, etc.

## Motion and forces

$\vec{v} = \frac{\vec{d}}{t}$

$\vec{a} = \frac{\overrightarrow{v_2} - \overrightarrow{v_1}}{t}$

$\vec{d} = \frac{\overrightarrow{v_1} + \overrightarrow{v_2}}{2}t$

$\vec{d} = \overrightarrow{v_1}t + \frac{1}{2}\vec{a}(t^2)$

$\vec{d} = \overrightarrow{v_2}t - \frac{1}{2}\vec{a}(t^2)$

$v_2^2 = v_1^2 + 2ad$

$\overrightarrow{F_{net}} = m\vec{a}$

$F_f = \mu F_N$

$\sin\theta = \frac{opposite}{hypotenuse}$ $\cos\theta = \frac{adjacent}{hypotenuse}$ $\tan\theta = \frac{opposite}{adjacent}$

If $ax^2 + bx + c = 0$, then $x = \frac{-b \pm \sqrt{b^2 - 4ac}}{2a}$

Copyright © 2023 The Ontario Educational Communications Authority. All rights reserved.

## Energy and society

$W = Fd$

$P = \frac{W}{t} = \frac{\Delta E}{t}$

$E_g = mgh$

$E_k = \frac{1}{2}mv^2$

$E_T = E_g + E_k$

$\%\ efficiency = \frac{useful\ output\ energy}{input\ energy} \times 100\%$

$E = mc^2$

$Q = mc\Delta T$

$Q = mL$

$Q_{lost} + Q_{gained} = 0$

## Electricity and magnetism

$Q = Ne$

$I = \frac{Q}{t}$

$V = \frac{\Delta E}{Q}$

$E = VIt$

$V = IR$

$P = IV = I^2R = \frac{V^2}{R}$

$Cost = rate \times energy\ consumed$

$\frac{V_s}{V_p} = \frac{I_p}{I_s} = \frac{N_s}{N_p}$

Copyright © 2023 The Ontario Educational Communications Authority. All rights reserved.

## Physical constants

$g = 9.8\ \mathrm{m/s^2} = 9.8\ \mathrm{N/kg}$

$G = 6.67 \times 10^{-11}\ \frac{\mathrm{Nm^2}}{\mathrm{kg^2}}$

$c = 3.0 \times 10^8\ \mathrm{m/s}$

$e = 1.6 \times 10^{-19}\ \mathrm{C}$

## Physical properties

| Material | Specific heat capacity (J/kg°C) | $L_f$ (J/kg) | Melting/ freezing point (°C) | $L_v$ (J/kg) | Boiling/ condensation point (°C) |
|---|---|---|---|---|---|
| Ice | $2.1 \times 10^3$ | $3.3 \times 10^5$ | 0 | $2.3 \times 10^6$ | 100 |
| Water | $4.2 \times 10^3$ | $3.3 \times 10^5$ | 0 | $2.3 \times 10^6$ | 100 |

Copyright © 2023 The Ontario Educational Communications Authority. All rights reserved.

## Part A: Waves and sound (23 marks) (approximate time 24 minutes)

**1.** A source makes 10 cycles in 5.0 s in a string. A diagram of some of the waves in the string is shown below. Complete the questions that follow.

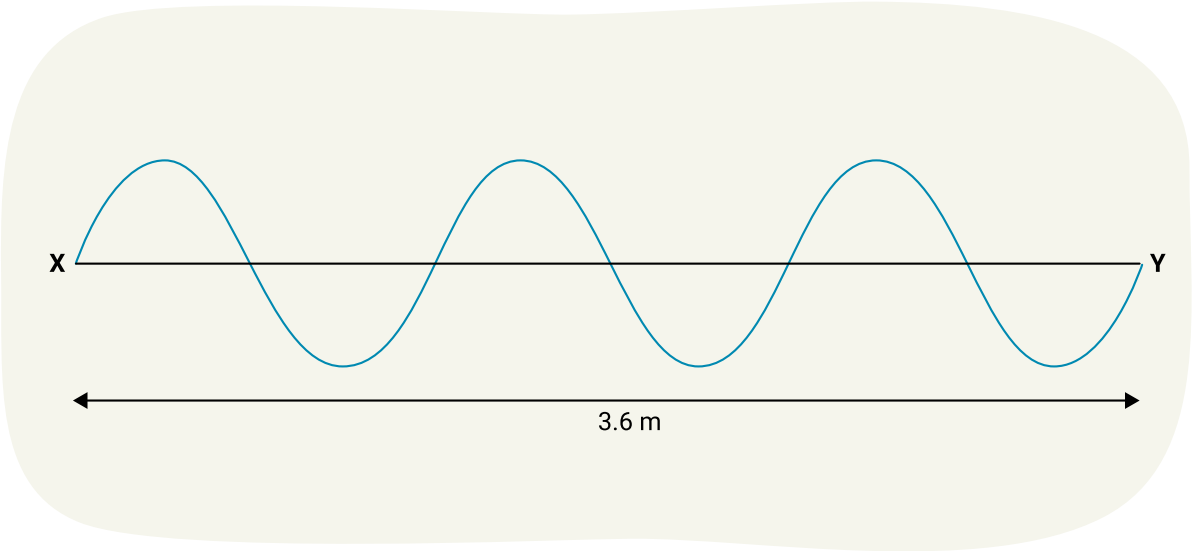


a) What type of wave does the source make? How do you know? **(2 marks)**
This is a transverse wave. **(1 mark)**
We know because the motion of the particles in the string (up and down) is perpendicular to the direction of travel of the wave (side to side). **(1 mark)**

b) Label the following measurements on the diagram: wavelength, amplitude. **(1 mark; ½ mark each)**
Answers may vary.

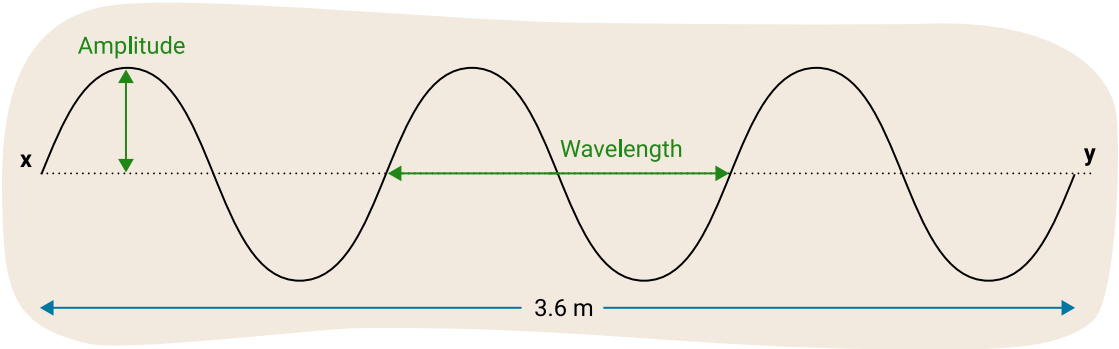


c) Find the wavelength in metres. **(1 mark)**

There are 6 loops in the wave. Each loop is half a wavelength.

$$\frac{\lambda}{2} = \frac{d}{6}$$

$$\lambda = 2\left(\frac{3.6\text{ m}}{6}\right)$$

Copyright © 2023 The Ontario Educational Communications Authority. All rights reserved.

$\lambda = 1.2\ \mathrm{m}$ **(1 mark)**

d) Find the frequency. **(1 mark)**

$$f = \frac{N}{t}$$
$$f = \frac{10}{5.0\ \mathrm{s}}$$
$f = 2.0\ \mathrm{Hz}$ **(1 mark)**

e) Find the speed of the wave. **(1 mark)**

$$v = f\lambda$$
$$v = (2.0\ \mathrm{Hz})(1.2\ \mathrm{m})$$
$v = 2.4\ \mathrm{m/s}$ **(1 mark)**

**2.** A car moving at 32.4 m/s sounds a 481 Hz horn when the temperature of the air is 24.0 °C. A person at the side of the highway hears the horn as the car is approaching and while it is moving away.

a) Why will the two frequencies be different? **(2 marks)**

As the car moves toward the person on the side of the highway, the source of the sound waves is moving at the same time as the sound waves themselves. Since later waves have less distance to travel as the car gets closer, they appear to arrive more frequently. Their observed frequency increases. **(1 mark)**

As the car moves away, the same process happens in reverse. Later waves take longer to get to the observer, so the waves are farther apart and the observed frequency decreases. **(1 mark)**

Copyright © 2023 The Ontario Educational Communications Authority. All rights reserved.

b) Calculate the observed frequency when the car is moving towards the person and away from the person. Indicate which frequency is the approaching frequency, and which is the frequency observed when the car is moving away. **(5 marks)**

Given:

$v_{source} = 32.4\ \mathrm{m/s}$

$T = 24.0\ °\mathrm{C}$

$f_1 = 481\ \mathrm{Hz}$

Unknown:

$f_2 = ?$

$v_{sound} = ?$

Equation:

$$v_{sound} = 332\frac{\mathrm{m}}{\mathrm{s}} + \left(0.59\frac{\mathrm{m}}{\mathrm{s°C}}\right)T$$

$$f_2 = f_1\left(\frac{v_{sound}}{v_{sound} \pm v_{source}}\right)$$

Solve:

$$v_{sound} = 332\frac{\mathrm{m}}{\mathrm{s}} + \left(0.59\frac{\mathrm{m}}{\mathrm{s°C}}\right)(24.0\ °\mathrm{C})$$

$v_{sound} = 346.16\ \mathrm{m/s}$ **(1 mark)**

$f_2 = (481\ \mathrm{Hz})\left(\frac{346.16\frac{\mathrm{m}}{\mathrm{s}}}{346.16\frac{\mathrm{m}}{\mathrm{s}} \pm 32.4\frac{\mathrm{m}}{\mathrm{s}}}\right)$ **(1 mark)**

$f_2 = 439.9\ \mathrm{Hz}$ or $530.7\ \mathrm{Hz}$ **(1 mark)**

When approaching, the observed frequency will be 531 Hz. **(1 mark)**
When moving away, the observed frequency will be $4.40 \times 10^2$ Hz. **(1 mark)** *3 significant digits, so scientific notation is needed.

Copyright © 2023 The Ontario Educational Communications Authority. All rights reserved.

**3.** A source with a frequency of 60.00 Hz is used to make waves in a rope, which is 3.000 m long. It takes 0.1000 s for the waves to travel from one fixed end of the rope to the other. How many loops are in the standing wave on the rope? **(5 marks)**

Given:
$f = 60.00\ \mathrm{Hz}$
$L = 3.000\ \mathrm{m}$
$t = 0.1000\ \mathrm{s}$

Unknown:
$\#\ of\ loops = ?$

Equation:
$v = f\lambda$

Solve:
We need to find the wavelength, then divide by two to find the length of a loop.
$v = \frac{3.000\ \mathrm{m}}{0.1000\ \mathrm{s}}$
$v = 30.00\ \mathrm{m/s}$ **(1 mark)**
$\lambda = \frac{v}{f}$
$\lambda = \frac{30.00\ \mathrm{m/s}}{60.00\ \mathrm{Hz}}$
$\lambda = 0.5000\ \mathrm{m}$ **(1 mark)**
Each loop is half a wavelength, so the length of a loop is
$\frac{\lambda}{2} = 0.2500\ \mathrm{m}$ **(1 mark)**

Divide the length of the rope by the length of a loop to get the number.
$n = \frac{3.000\ \mathrm{m}}{0.2500\ \mathrm{m}}$ **(1 mark)**
$n = 12.00$

Statement:
There are 12 loops in the standing wave. **(1 mark)**

Copyright © 2023 The Ontario Educational Communications Authority. All rights reserved.

**4.** A 560 Hz tuning fork is held near the top of a closed air column while the water level, which is filled to the top, is slowly lowered. The temperature in the room is 12.0 °C. Find the first two resonant lengths in the air column. **(5 marks)**

$v_{sound} = 332\frac{\text{m}}{\text{s}} + \left(0.59\frac{\text{m}}{\text{s°C}}\right)(12.0\ \text{°C})$
$v_{sound} = 339.08\ \text{m/s}$ **(1 mark)**

$\lambda = \frac{v}{f}$
$\lambda = \frac{339.08\frac{\text{m}}{\text{s}}}{560\ \text{Hz}}$
$\lambda = 0.6055\ \text{m}$ **(1 mark)**

In a closed air column, $L_1 = \frac{\lambda}{4}$ and $L_2 = \frac{3\lambda}{4}$. **(1 mark)**
$L_1 = \frac{0.6055\ \text{m}}{4}$
$L_1 = 0.15\ \text{m}$ **(1 mark)**
$L_2 = \frac{3\lambda}{4}$
$L_2 = \frac{3(0.6055\ \text{m})}{4}$
$L_2 = 0.45\ \text{m}$ **(1 mark)**

Copyright © 2023 The Ontario Educational Communications Authority. All rights reserved.

## Part B: Motion and forces (39 marks) (approximate time 38 minutes)

**5.** Examine the following graph and then answer the questions that follow.

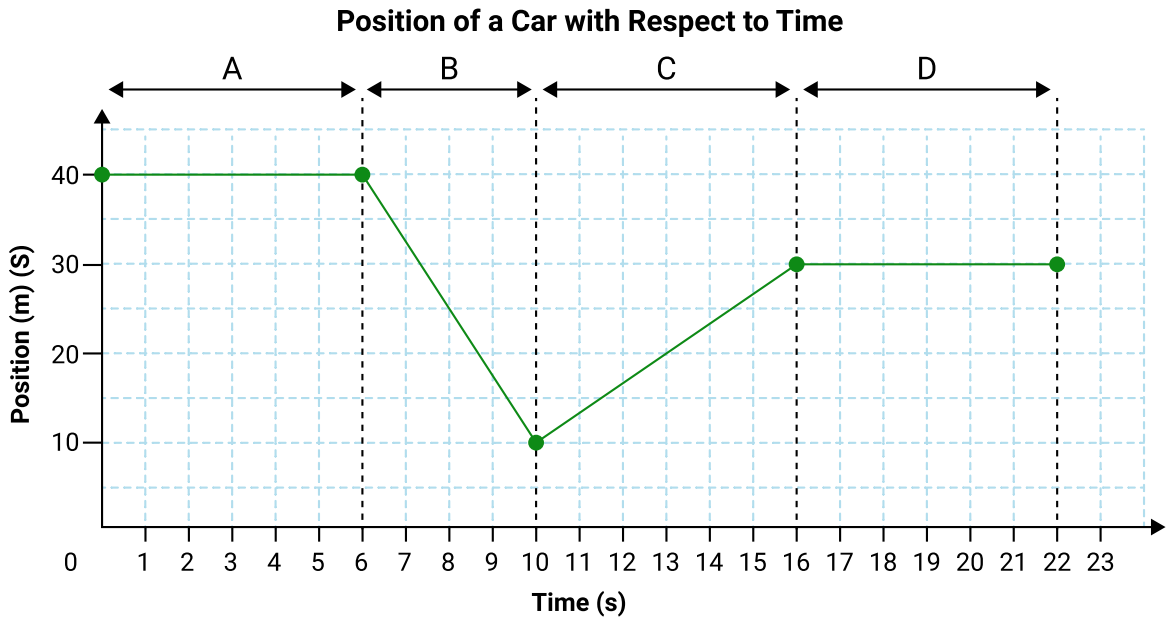


a) What is the total distance travelled? **(1 mark)**

The car travels from a position of 40.0 to 10.0 in section B (a distance of 30.0 m). The car travels from 10.0 to 30.0 in section C (a distance of 20.0 m).
Together, the car travels a total distance of 50.0 m. **(1 mark)**

b) What is the car's total displacement **(1 mark)**

Displacement is the difference between start and end position. $\vec{d} = 30.0\ \mathrm{m}\ [S] - 40.0\ \mathrm{m}\ [S]$
The displacement is 10.0 m [N] (or -10.0 m [S]). **(1 mark)**

c) What is the car's velocity in interval A? **(1 mark)**

The car has a constant position in interval A, so its velocity is 0 m/s. **(1 mark)** *No direction needed, since the magnitude is zero.

Copyright © 2023 The Ontario Educational Communications Authority. All rights reserved.

d) What is the car's velocity in interval C? **(2 marks)**

$$\vec{v} = \frac{\vec{d}}{t}$$
$$\vec{v} = \frac{20.0\ \mathrm{m\ [S]}}{16.0\ \mathrm{s} - 10.0\ s}$$
$\vec{v} = 3.33\,\frac{\mathrm{m}}{\mathrm{s}}\,[\mathrm{S}]$ **(2 marks)**

e) What is the car's average velocity over the first 16 seconds? **(2 marks)**

$$\vec{v} = \frac{30.0\ \mathrm{m\ [S]} - 40.0\ \mathrm{m\ [S]}}{16.0\ \mathrm{s}}$$
$\vec{v} = 0.625\,\frac{\mathrm{m}}{\mathrm{s}}\,[\mathrm{N}]$ or -0.625 m/s [S]. **(2 marks)**

f) What is the car's average speed over the first 16 seconds? **(2 marks)**

The car travels a distance of 50.0 m in the first 16 seconds, so the average speed is:
$$v = \frac{d}{t}$$
$$v = \frac{50.0\ \mathrm{m}}{16.0\ \mathrm{s}}$$
$v = 3.13\ \mathrm{m/s}$. **(2 marks)** *Note, no direction since this is a speed rather than a velocity.

Copyright © 2023 The Ontario Educational Communications Authority. All rights reserved.

**6.** A boy in a wagon starts at rest and begins rolling down a straight ramp, gaining speed with uniform acceleration as he travels. In 6.00 s, he is travelling at 4.25 m/s.

a) What is his velocity at 10.0 s? **(4 marks)**

First, find the uniform acceleration.

$$a = \frac{v_2 - v_1}{t}$$

$$a = \frac{4.25\,\frac{\mathrm{m}}{\mathrm{s}} - 0\,\frac{\mathrm{m}}{\mathrm{s}}}{6.00\ \mathrm{s}}$$

$a = 0.7083\ \mathrm{m/s^2}$ [downhill] **(1 mark)**

In 10 seconds, then, his velocity will be:

$\vec{a} = \frac{\vec{v_2} - \vec{v_1}}{t}$ **(1 mark)**

$\vec{v_2} = \vec{a}t + \vec{v_1}$

$\vec{v_2} = \left(0.7083\,\frac{\mathrm{m}}{\mathrm{s}^2}\right)(10.0\ \mathrm{s}) + 0$

$\vec{v_2} = 7.08\ \mathrm{m/s}$ [downhill]. **(2 marks)**

b) How long will it take him to reach a speed of 28.0 m/s? **(2 marks)**

$$\vec{a} = \frac{\vec{v_2} - \vec{v_1}}{t}$$

$$t = \frac{\vec{v_2} - \vec{v_1}}{\vec{a}}$$

$t = \frac{28.0\frac{\mathrm{m}}{\mathrm{s}} - 0\frac{\mathrm{m}}{\mathrm{s}}}{0.7083\ \mathrm{m/s^2}}$ **(1 mark)**

$t = 39.5\ \mathrm{s}$ **(1 mark)**

**7.** A golfer hits a ball, giving it a velocity of 80.0 m/s [10° above horizontal].

a) How long, in seconds, is the ball in the air for before it hits the ground? **(4 marks)**

$v_{1y} = 80.0\,\frac{\mathrm{m}}{\mathrm{s}}\sin 10°$

$v_{1y} = 13.89\,\frac{\mathrm{m}}{\mathrm{s}}$ [up] **(1 mark)**

$a_y = -9.8\,\frac{\mathrm{m}}{\mathrm{s}^2}$ [up]

$d = 0$

$d = v_1 t + \frac{1}{2}at^2$

$0 = -4.9t^2 + 13.89t$ **(1 mark)**

$4.9t = 13.89$

$t = 2.835\ \mathrm{s}$ **(1 mark)**

The ball is in the air for 2.8 seconds. **(1 mark)**

Copyright © 2023 The Ontario Educational Communications Authority. All rights reserved.

b) Find how far the ball travels horizontally before landing on the ground. **(3 marks)**

$v_{1x} = 80.0 \cos 10°$ **(1 mark)**
$d = vt$
$d = (78.78 \text{ m/s})(2.835 \text{ s})$ **(1 mark)**
$d = 223.35 \text{ m}$
The ball travels 220 m horizontally. **(1 mark)**

**8.** A hockey puck with a mass of 0.168 kg is sliding on ice when it hits a rough patch that exerts a frictional force of 0.340 N [S].

a) Draw the free-body diagram of the puck while it slides on the rough patch. **(1 mark)**

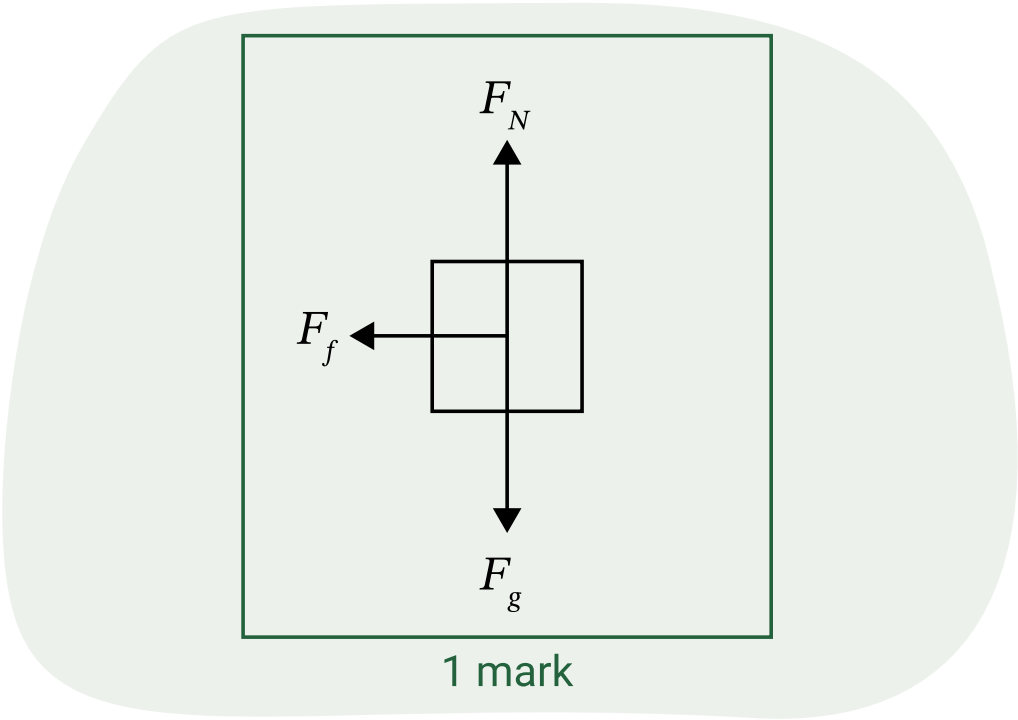


b) Determine the puck's acceleration as it slides on the rough patch of ice. **(3 marks)**

$F_{net} = ma$ **(1 mark)**
$a = \frac{F_{net}}{m}$
$a = \frac{0.340 \text{ N [S]}}{0.168 \text{ kg}}$
$a = 2.02 \text{ m/s}^2 \text{ [S]}$ **(2 marks)**

Copyright © 2023 The Ontario Educational Communications Authority. All rights reserved.

**9.** A child's wagon with rubber base is being pulled along the street. The wagon and its load have a combined mass of 28.0 kg. The coefficient of friction for rubber on dry asphalt is 1.07.

a) Find the force of friction. **(2 marks)**

$F_f = \mu F_N$
$F_f = \mu mg$
$F_f = (1.07)(28.0)(9.8)$
$F_f = 293.6 \text{ N}.$
The force of friction is 290 N [backward]. **(2 marks)**

b) How large must the pulling force be in order to give the wagon an acceleration of 0.50 m/s² [forward]? **(3 marks)**

$F_{net} = ma$
$F_{net} = (28.0)(0.50)$
$F_{net} = 14 \text{ N}$ **(1 mark)**

$F_{net} = F_{pull} - F_f$ **(1 mark)**
$F_{pull} = 14 \text{ N} + 293.6 \text{ N}$
The pulling force must be 310 N. **(1 mark)**

c) If the wagon starts from rest, find its displacement after 22.0 s. **(2 marks)**

$d = v_1 t + \frac{1}{2}at^2$ **(1 mark)**
$d = 0(22) + \frac{1}{2}(0.50)(22.0)^2$
$d = 1.0 \text{ m [forward]}$ **(1 mark)**

Copyright © 2023 The Ontario Educational Communications Authority. All rights reserved.

**10.** A passenger train has six identical cars with a mass of 1500 kg each. They are accelerating at 0.80 m/s² [N]. Calculate the tension in the coupling between car 4 and 5. **(2 marks)**

The coupling between cars 4 and 5 is pulling 2 cars: car 5 and car 6.
$F_{net} = F_T = ma$
$F_T = 2(1500\text{ kg})\left(0.80\frac{\text{m}}{\text{s}^2}\right)$ **(1 mark)**
$F_T = 2{,}400\text{ N}$ **(1 mark)**

**11.** A parcel is dragged with an applied force of 52 N [W] on a rough surface. The force of friction on the parcel is 52 N [E]. Describe the motion of the parcel. **(2 marks)**

Since the forces are equal in magnitude, they cancel and give the object a net force of zero. Since it is already moving, it will continue to move at the same speed without slowing down or speeding up. **(2 marks)**

**12.** Use Newton's laws to explain why a cannon rolls backwards after shooting a cannonball forward. **(2 marks)**
This is an application of Newton's third law. The cannon (or the gunpowder) applies a force [forward] on the cannon ball. An equal and opposite reaction force must also be applied. In this case, it is applied to the cannon itself, pushing it [backward]. **(2 marks)**

Copyright © 2023 The Ontario Educational Communications Authority. All rights reserved.

## Part C: Energy and society (24 marks) (approximate time 24 minutes)

**13.** A child with a mass of 43.0 kg is on a swing. At maximum amplitude, the swing is 2.60 m above the ground.

a) Find the child's gravitational potential energy at a height of 2.60 m. **(2 marks)**

$E_g = mgh$
$E_g = (43.0\ \text{kg})\left(9.8\frac{\text{m}}{\text{s}^2}\right)(2.60\ \text{m})$ **(1 mark)**
$E_g = 1{,}095.64\ \text{J}$

The child has 1,100 J of gravitational potential energy. **(1 mark)**

b) How fast is the child moving when she is 1.25 m above the ground? **(3 marks)**

$E_T = 1{,}095.64\ \text{J}$
$E_k = E_T - E_g$ **(1 mark)**
$E_k = 1{,}095.64\ \text{J} - (43.0\ \text{kg})\left(9.8\frac{\text{m}}{\text{s}^2}\right)(1.25\ \text{m})$
$\frac{1}{2}mv^2 = 568.89\ \text{J}$ **(1 mark)**
$v^2 = 26.46$
$v = 5.14\ \text{m/s}$
She is moving 5.1 m/s. **(1 mark)**

**14.** For each of the following situations, state whether work is being done or not. Explain how you know.

a) A student wearing a backpack walks across the room? **(2 marks)**

No work is done. The force is acting upward to hold up the backpack, but the displacement is horizontal. **(2 marks)**

b) A student pushes a snow shovel across a driveway. **(2 marks)**

The student is doing work on the shovel by pushing it [forward] across the driveway while moving in the same direction. **(2 marks)**

c) The brakes of a car are applied as the car slows to a stop. **(2 marks)**

The brakes of the car are doing work, applying a force [backward] on the car while it moves [forward]. Even though the work is negative, work is still being done. **(2 marks)**

**15.** A piece of ice with a mass of 65.0 g is transferred directly from the freezer, at a temperature of -7.0 °C, to an insulating cup containing 200.0 g of water at 75 °C. Calculate the final

Copyright © 2023 The Ontario Educational Communications Authority. All rights reserved.

temperature of the water. Ignore any heat lost to the cup and its surroundings. **(6 marks)**

$Q_{lost} + Q_{gained} = 0$
The ice gains heat while the water loses heat.

Heat lost:
$Q_{lost} = mc\Delta T$
$Q_{lost} = (0.2000)(4.2 \times 10^3)(T_{final} - 75\ °\text{C})$
$Q_{lost} = 840T_{final} - 63{,}000\ \text{J}$ **(1 mark)**

Heat gained:
The ice must be warmed to its melting point, then melted, then warmed to the final temperature.
$Q_{warm\ ice} = (0.0650)(2.1 \times 10^3)(7.0\ °\text{C})$ **Note that the c for ice is different from that of water.
$Q_{warm\ ice} = 955.5\ \text{J}$ **(1/2 mark)**

$Q_{melt} = mL_f$
$Q_{melt} = (0.0650\ \text{kg})\left(3.3 \times 10^5 \frac{\text{J}}{\text{kg}}\right)$
$Q_{melt} = 21{,}450\ \text{J}$ **(1 mark)**

Now that the ice has melted, the water must warm to the final temperature. Note that we now need to use the c for water.
$Q_{warm\ melted\ ice} = (0.0650)(4.2 \times 10^3)(T_{final} - 0\ °\text{C})$
$Q_{warm\ melted\ ice} = 273T_{final}$ **(1/2 mark)**

Combining,
$840T_{final} - 63{,}000 + 955.5 + 21{,}450 + 273T_{final} = 0$ **(1 mark)**
$1{,}113T_{final} - 40{,}594.5 = 0$ **(1 mark)**
$T_{final} = 36.5\ °\text{C}$

The final temperature is 36 °C. **(1 mark)**

Copyright © 2023 The Ontario Educational Communications Authority. All rights reserved.

**16.** Carbon-14 has a half-life of 5,730 years. A sample of carbon-14 has a mass of $2.0\times10^{-6}$ g.

a) How much carbon-14 will be left after 22,920 years? **(3 marks)**

22,920 is 4 half lives. **(1 mark)**
Each half life, the amount is divided by 2. **(1 mark)**
After 4 half lives, the amount of carbon-14 will be $\frac{2.0\times10^{-6}\text{ g}}{2\times2\times2\times2} = 1.3\times10^{-7}$ g. **(1 mark)**

b) Why can carbon-14 be used to date things that have died, but not to date rocks that formed many millions of years ago? Give two reasons. **(2 marks)**

Carbon-14 is present in living things due to the carbon dioxide in the atmosphere. Things that were not alive did not respire to absorb the carbon-14 in the first place. **(1 mark)**.

In addition, carbon-14 has a relatively short half life (a few thousand years). After a million or more years, there will not be enough carbon-14 to measure as it will all have decayed. **(1 mark)**

**17.** Consider this nuclear reaction as the parent atom undergoes beta-positive decay. How many protons and how many neutrons does the resulting nucleus have? **(2 marks)**

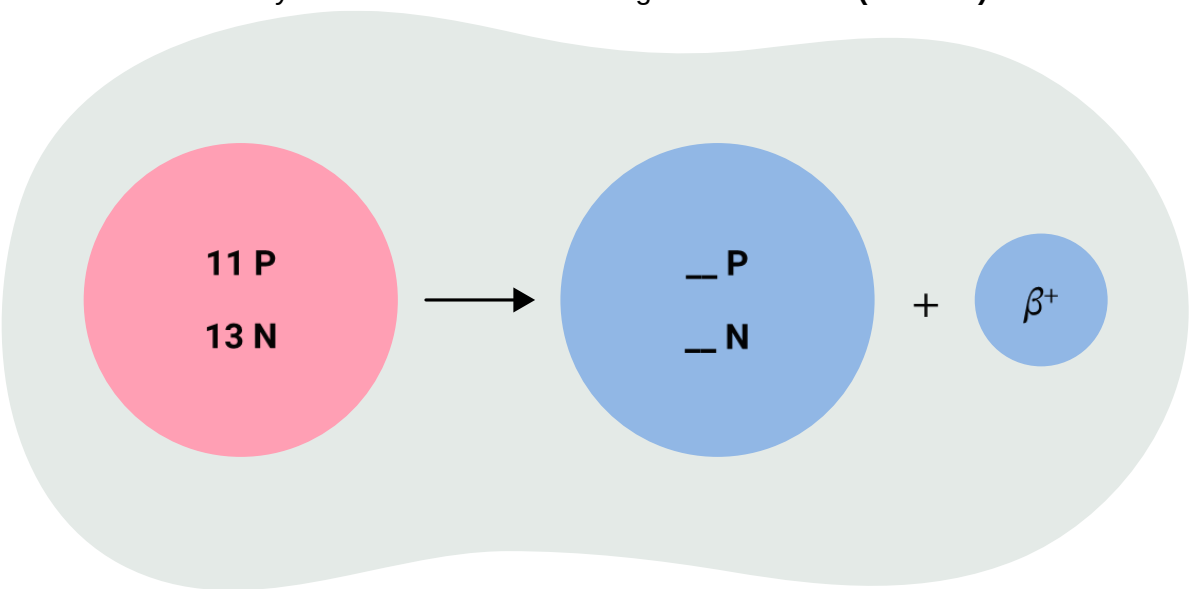


Beta-positive decay releases a positive electron, or positron. To conserve charge, a proton needs to transform into a neutron and a positron.
The resulting nucleus will have 11-1 = 10 protons **(1 mark)**
And 13+1 = 14 neutrons. **(1 mark)**

Copyright © 2023 The Ontario Educational Communications Authority. All rights reserved.

## Part D: Electricity and magnetism (24 marks) (approximate time 24 minutes)

**18.** An electric kettle with a current of 8.0 A is connected to a 120 V source for 2.0 minutes.

a) How much energy does the kettle use? **(2 marks)**

$E = VIt$
$E = (120\ \text{V})(8.0\ \text{A})(2.0 \times 60\ \text{s})$ **(1 mark)**
$E = 115{,}200\ \text{J}$ **(1 mark)**

b) What is the resistance of the kettle? **(2 marks)**

$V = IR$
$R = \frac{V}{I}$
$R = \frac{120\ \text{V}}{8.0\ \text{A}}$ **(1 mark)**
$R = 15\ \Omega$ **(1 mark)**

c) Find the charge (in coulombs) that flows through the kettle to make this current. **(1 mark)**

$I = \frac{Q}{t}$
$Q = It$
$Q = (8.0\ \text{A})(2.0 \times 60\ \text{s})$
$Q = 960\ \text{C}.$ **(1 mark)**

Copyright © 2023 The Ontario Educational Communications Authority. All rights reserved.

**19.** Examine the following circuit diagram with four resistors connected to a battery.

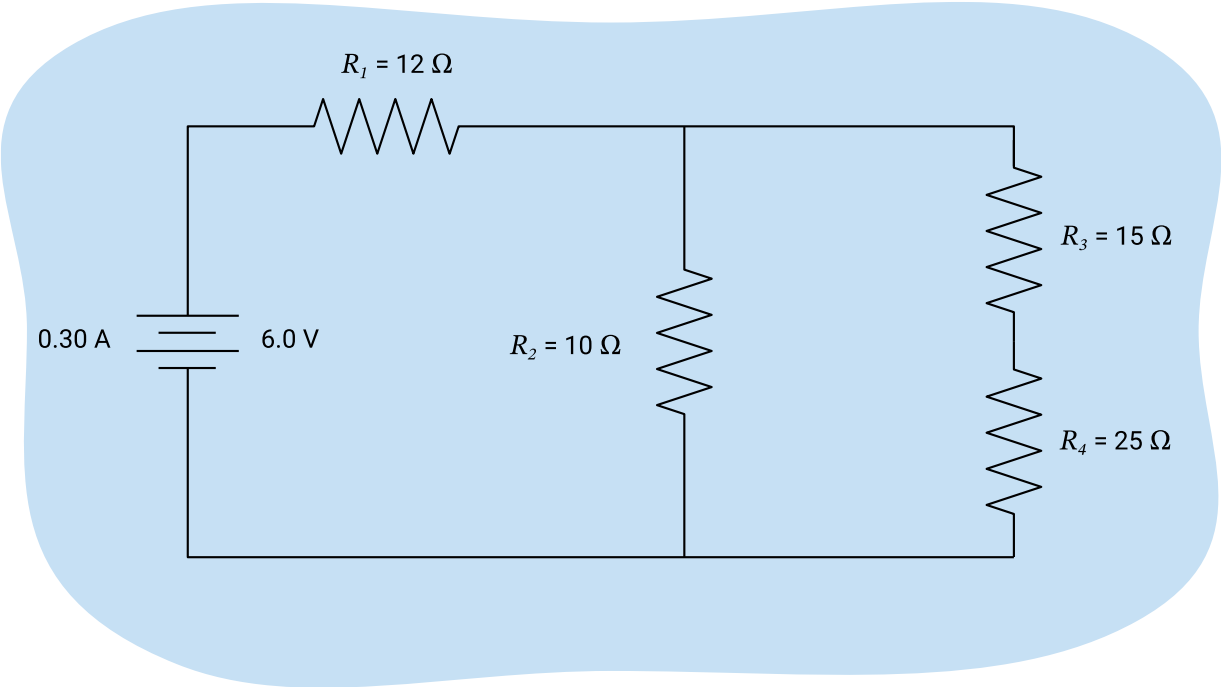


Find all of the missing values. Use the table that follows to organize your answers. **(12 marks)**

| | Resistance (Ω) | Current (A) | Voltage (V) |
|---|---|---|---|
| Total (T) | 20 | 0.30 | 6.0 |
| Resistor 1 | 12 | 0.30 | 3.6 |
| Resistor 2 | 10 | 0.24 | 2.4 |
| Resistor 3 | 15 | 0.06 | 0.9 |
| Resistor 4 | 25 | 0.06 | 1.5 |

We have the total current and voltage, so find the total resistance.

$R = \frac{V}{I}$

$R_{total} = \frac{6.0\ \text{V}}{0.30\ \text{A}}$

$R_{total} = 20\ \Omega$ **(2 marks)**

The current through R1 must be the same as the total current. $I_1 = 0.30\ \text{A}$ **(1 mark)**

$V_1 = (0.30\ \text{A})(12\ \Omega)$

$V_1 = 3.6\ \text{V}$ **(1 mark)**

Copyright © 2023 The Ontario Educational Communications Authority. All rights reserved.

Of the 6.0 V in the circuit, 3.6 are used in resistor 1. The other 2.4 must be used in each of the parallel paths. $V_2 = 2.4\ \mathrm{V}$. **(2 marks)**

$I_2 = \frac{V_2}{R_2}$

$I_2 = \frac{2.4\ \mathrm{V}}{10\ \Omega}$

$I_2 = 0.24\ \mathrm{A}$ **(1 mark)**

Of the 0.30 A in the circuit, 0.24 A go through the path with resistor 2. The other 0.06 A must go through the other path. $I_3 = I_4 = 0.06\ \mathrm{A}$ **(3 marks)**

$V_3 = (0.06\ \mathrm{A})(15\ \Omega) = 0.9\ \mathrm{V}$ **(1 mark)**

$V_4 = (0.06\ \mathrm{A})(25\ \Omega) = 1.5\ \mathrm{V}$ **(1 mark)**

Copyright © 2023 The Ontario Educational Communications Authority. All rights reserved.

**20.** Draw the magnetic field lines around the following conductors.

a) This straight conductor. **(1 mark)**

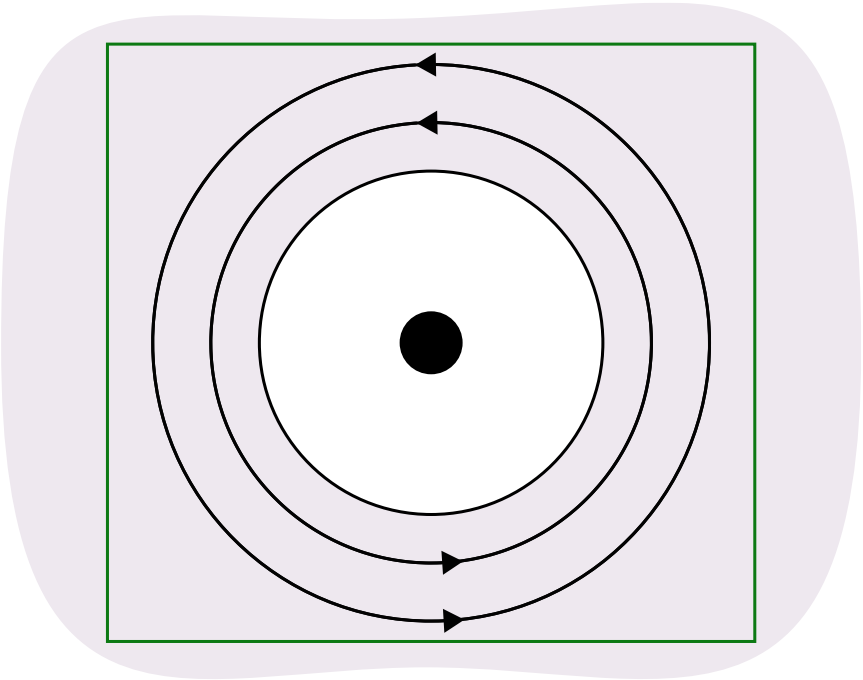

b) This coil. **(1 mark)**

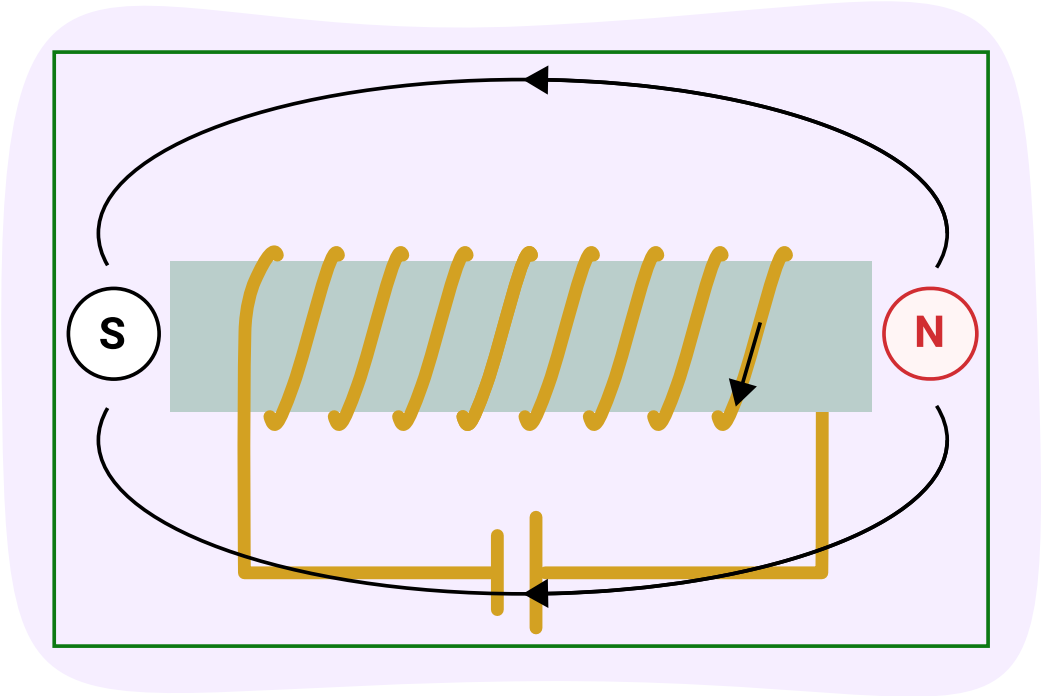


Copyright © 2023 The Ontario Educational Communications Authority. All rights reserved.

**21.** Complete the following diagram by drawing both magnetic fields and indicating the direction of the magnetic force on the conductor. **(2 marks)**

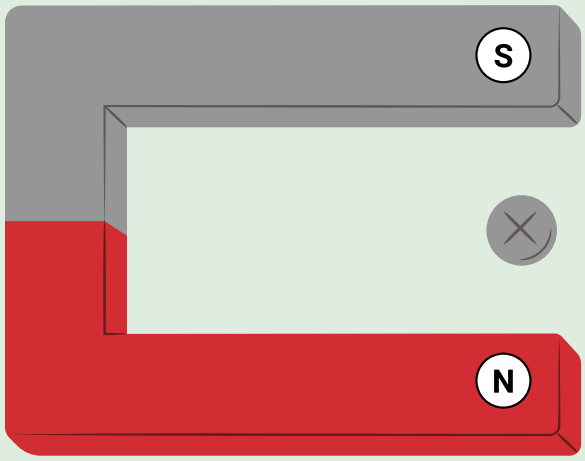


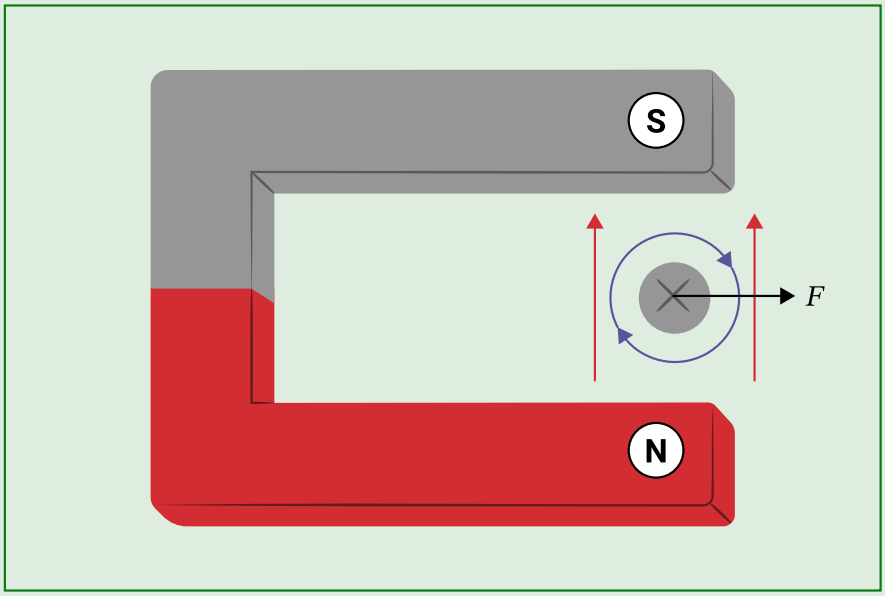


Copyright © 2023 The Ontario Educational Communications Authority. All rights reserved.

**22.** Describe the magnetic poles of the coil and draw the magnetic field that is induced when the following permanent magnet is moved toward the coil. **(2 marks)**

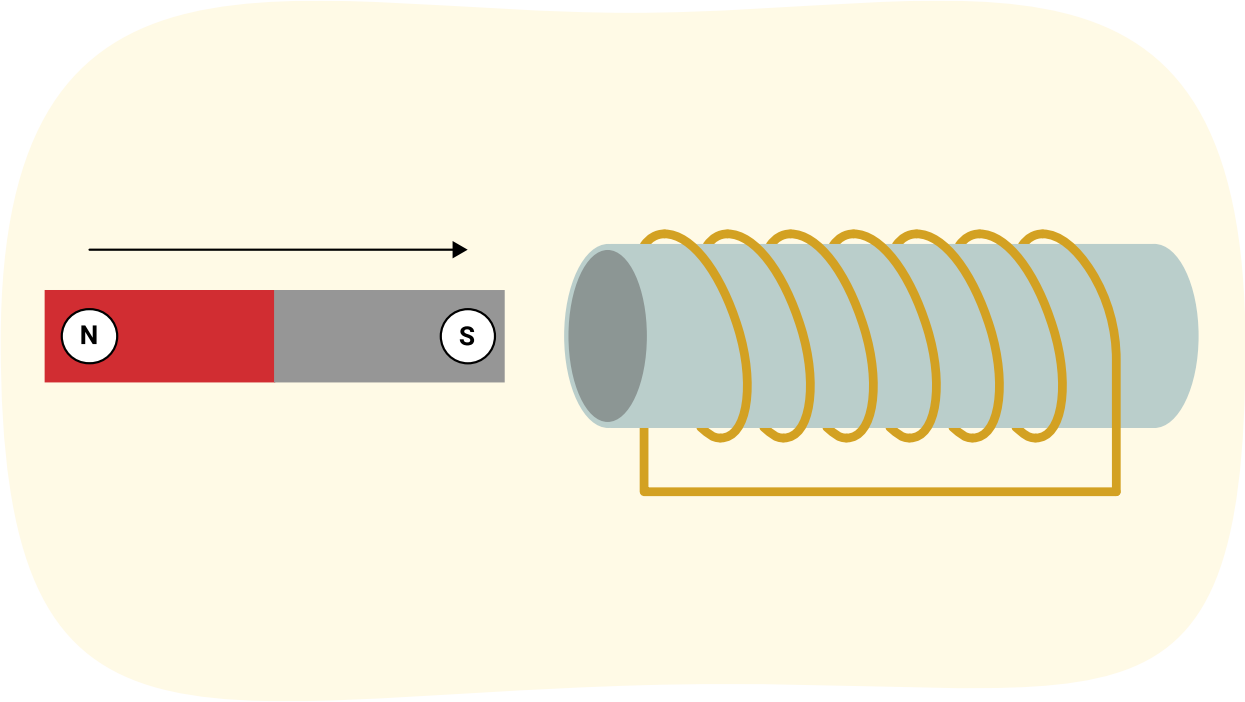


The induced current will oppose the motion. Since the magnet is moving toward the coil, a similar south pole will be induced on the left. A north pole will therefore be on the right. Using the right hand rule, the induced current will flow down the front of the coil. The field will go from north to south. **(1 mark for description, 1 mark for diagram)**

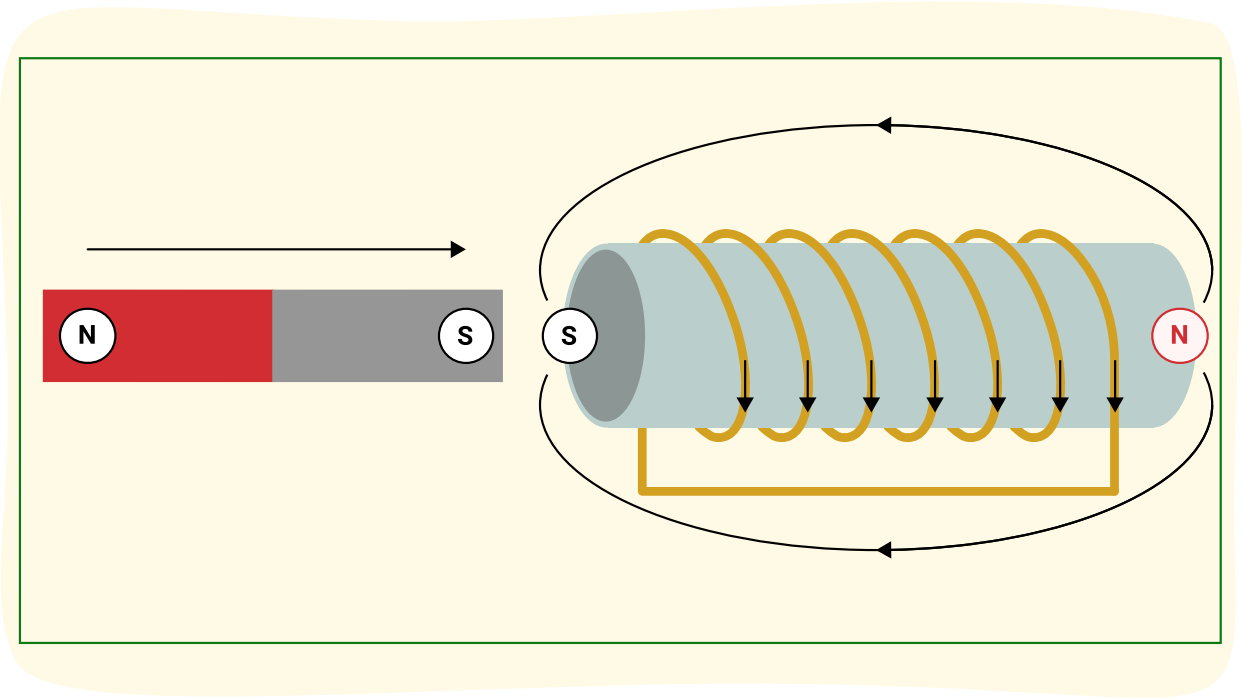


Copyright © 2023 The Ontario Educational Communications Authority. All rights reserved.

**23.** Describe which way the coil will rotate and explain how you know. **(1 mark)**

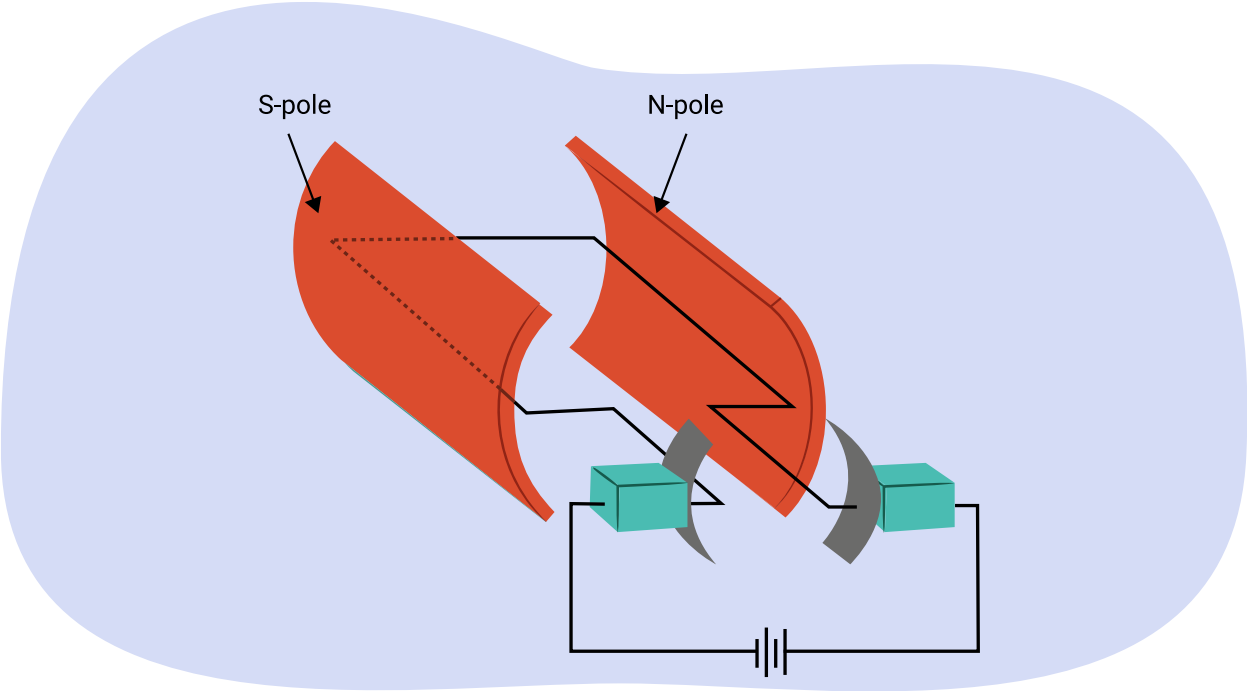


The current goes into the page on the right and out of the page on the left side of the coil.
The magnetic field goes from N to S.
The magnetic force will be [up] on the right and [down] on the left, so the coil will turn counterclockwise. **(1 mark)**

Copyright © 2023 The Ontario Educational Communications Authority. All rights reserved.